COB LED-Metal PCB
1215 Series

1215 Series

Light Distribution Curve:

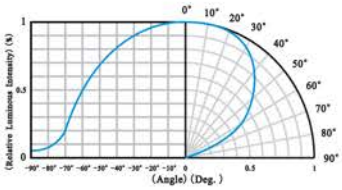

Features:

- Patented PCB structure, good heat conductive function and high reliability;
- Simplifying indoor LED illumination design and manufacturing process;
- Single uniform optics system, good optics conformity;
- Rated power: 3~7W;

Outline Dimensions/ Unit: mm

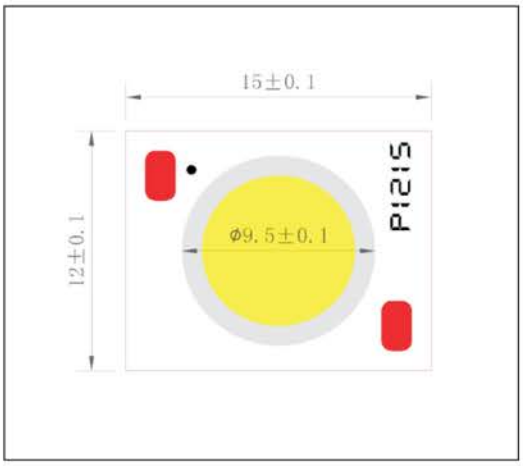

Absolute maximum parameters:

Parameter	Symbol	Rating
Working Temperature	T_{OPR}	-30~+100℃
Storage Temperature	T_{STG}	-40~+100℃

Parameter/Ta=25℃:

Part Number	Rating	Color	Color Temperature Tc (K)	CRI Ra Min.	I_F(mA) TEST	Φ_V (lm) Typ.	V_F (V) Typ.
VO- Metal PCB 1215	3W	Natural White	6000	70	350	365	9.3
		Neutral White	4000	75	350	342	9.3
		Warm White	3000	80	350	320	9.3
	5W	Natural White	6000	70	500	455	9.3
		Neutral White	4000	75	500	474	9.3
		Warm White	3000	80	500	635	9.3
	7W	Natural White	6000	70	350	740	18.9
		Neutral White	4000	75	350	659	18.9
		Warm White	3000	80	350	635	18.9

COB LED-Metal PCB
1723 Series

1723 Series

Light Distribution Curve:

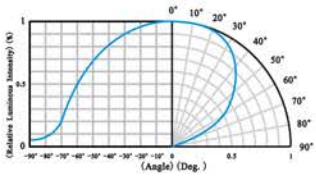

Features:

- Patented PCB structure, fast thermal dissipation function and low thermal resistance;
- Using less LED and other accessories, lower down total system cost;
- Good optics conformity and high reliability;
- Rated power: 7-20W;

Outline Dimensions/ Unit: mm

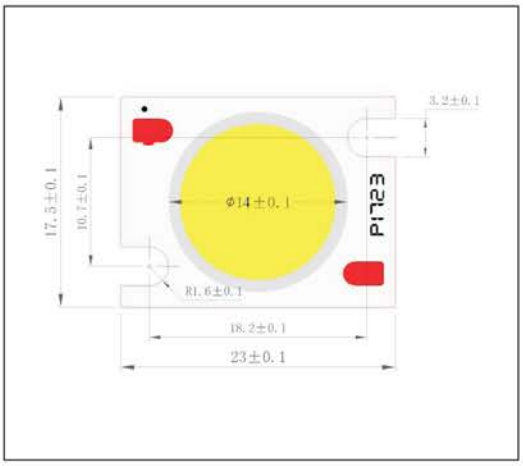

Absolute maximum parameters:

Parameter	Symbol	Rating
Working Temperature	T_{OPR}	-30~+100℃
Storage Temperature	T_{STG}	-40~+100℃

Parameter/Ta=25℃:

Part Number	Rating	Color	Color Temperature Tc (K)	CRI Ra Min.	I_F(mA) TEST	Φv (lm) Typ.	V_F (V) Typ.
VO- Metal PCB 1723	7W	Natural White	6000	70	350	717	/
		Neutral White	4000	75	350	673	/
		Warm White	3000	80	350	624	/
	10W	Natural White	6000	70	500	1120	/
		Neutral White	4000	75	500	1050	/
		Warm White	3000	80	500	979	/
	13W	Natural White	6000	70	350	1410	36
		Neutral White	4000	75	350	1320	36
		Warm White	3000	80	350	1228	36
	20W	Natural White	6000	70	700	2150	27.5
		Neutral White	4000	75	700	2020	27.5
		Warm White	3000	80	700	1877	27.5

COB LED-Metal PCB
1010 Series

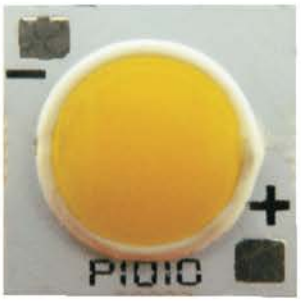

1010 Series

Light Distribution Curve:

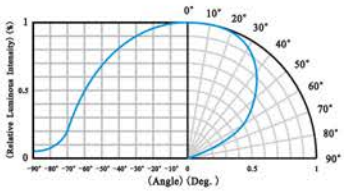

Features:

- Patented PCB structure, good heat conductivity and high reliability;
- Simplifying indoor LED illumination design and manufacturing process;
- Single uniform optics system, good optics conformity;
- Rated power: 3~5W;

Outline Dimensions/ Unit: mm

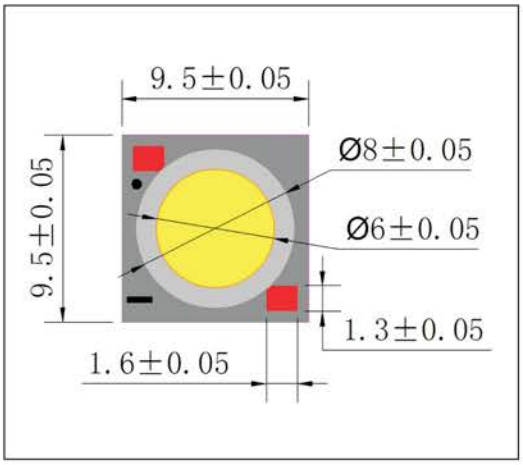

Absolute maximum parameters:

Parameter	Symbol	Rating
Forward Current	I_F	450mA
Reverse Voltage	V_{RMAX}	15V
Working Temperature	T_{OPR}	-30~+100℃
Storage Temperature	T_{STG}	-40~+100℃

Parameter/Ta=25℃:

Part Number	Rating	Color	Color Temperature Tc (K)	CRI Ra Min.	I_F(mA) TEST	Φ_V (lm) Typ.	V_F (V) Typ.
VO- Metal PCB 1010	3W	Natural White	6000	70	350	365	9.3
		Neutral White	4000	75	350	342	9.3
		Warm White	3000	80	350	320	9.3

COB LED-Metal PCB

1919 Series

1919 Series

Light Distribution Curve:

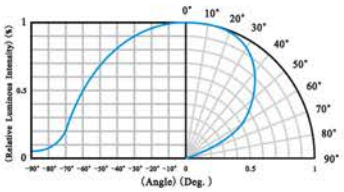

Features:

- Patented PCB structure, fast thermal dissipation function and low thermal resistance;
- Using less LED and other accessories, lower down total system cost;
- Good optics conformity and high reliability;
- Rated power: 20-40W;

Outline Dimensions/ Unit: mm

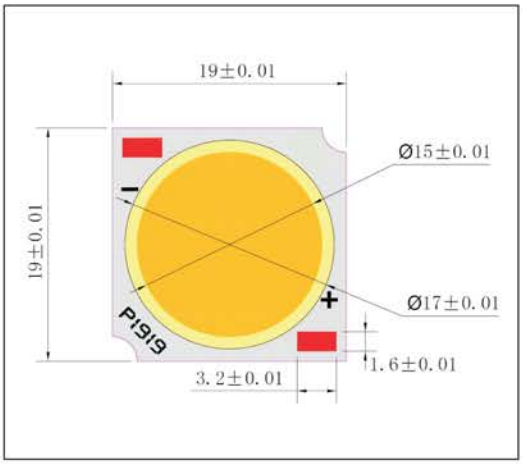

Absolute maximum parameters:

Parameter	Symbol	Rating
		25W
Forward Current	I_F	850mA
Reverse Voltage	V_{RMAX}	60V
Working Temperature	T_{OPR}	-30~+100℃
Storage Temperature	T_{STG}	-40~+100℃

Parameter/Ta=25℃:

Part Number	Rating	Color	Color Temperature Tc (K)	CRI Ra Min.	I_F(mA) TEST	Φv (lm) Typ.	V_F (V) Typ.
VO- Metal PCB 1919	25W	Natural White	6000	70	700	2950	37.8
		Neutral White	4000	70	700	2770	37.8
		Warm White	3000	80	700	2500	37.8

COB LED-Ceramic PCB
1208 Series

1208 Series

Light Distribution Curve:

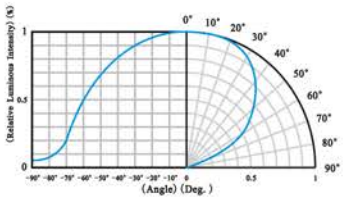

Features:

- Ceramic PCB, high reliability;
- Optimizing the design and manufacturing of LED lighting;
- Rated power: 3W.

Outline Dimensions/ Unit: mm

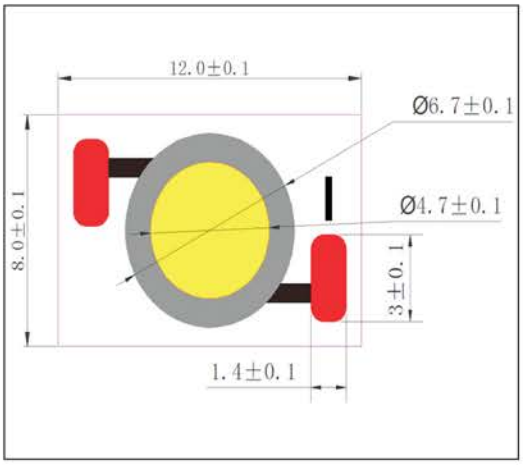

Absolute maximum parameters:

Parameter	Symbol	Rating
Forward Current	I_F	450mA
Reverse Voltage	V_{RMAX}	15V
Working Temperature	T_{OPR}	-30~+100℃
Storage Temperature	T_{STG}	-40~+100℃

Parameter/Ta=25℃:

Part Number	Rating	Color	Color Temperature Tc (K)	CRI Ra Min.	I_F(mA) TEST	Φ_V (lm) Typ.	V_F (V) Typ.
VO- Ceramic PCB 1208	3W	Natural White	6000	70	350	365	9.3
		Neutral White	4000	75	350	342	9.3
		Warm White	3000	80	350	320	9.3

COB LED-Ceramic PCB
1215 Series

1215 Series

Light Distribution Curve:

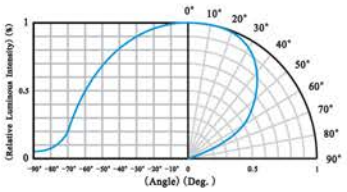

Features:

- Ceramic PCB, high reliability;
- Optimizing the design and manufacturing of LED lighting;
- Rated power: 7W.

Outline Dimensions/ Unit: mm

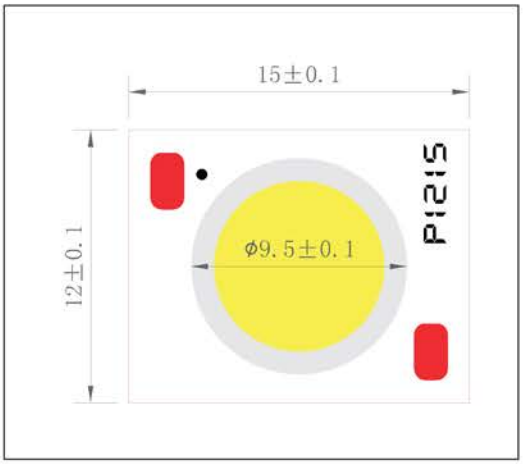

Absolute maximum parameters:

Parameter	Symbol	Rating
Forward Current	I_F	420mA
Reverse Voltage	V_{RMAX}	30V
Working Temperature	T_{OPR}	-30~+100℃
Storage Temperature	T_{STG}	-40~+100℃

Parameter/Ta=25℃:

Part Number	Rating	Color	Color Temperature Tc (K)	CRI Ra Min.	I_F(mA) TEST	Φv (lm) Typ.	V_F (V) Typ.
VO- Ceramic PCB 1215	7W	Natural White	6000	70	350	740	18.9
		Neutral White	4000	75	350	695	18.9
		Warm White	3000	80	350	635	18.9

COB LED-Ceramic PCB
2024 Series

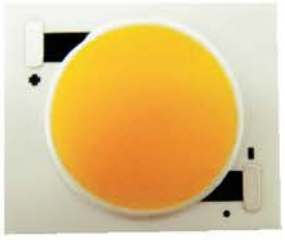

2024 Series

Light Distribution Curve:

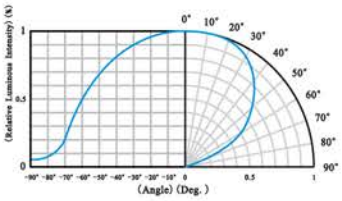

Features:

- Ceramic PCB, high reliability;
- Optimizing the design and manufacturing of LED lighting;
- Rated power: 25W.

Outline Dimensions/ Unit: mm

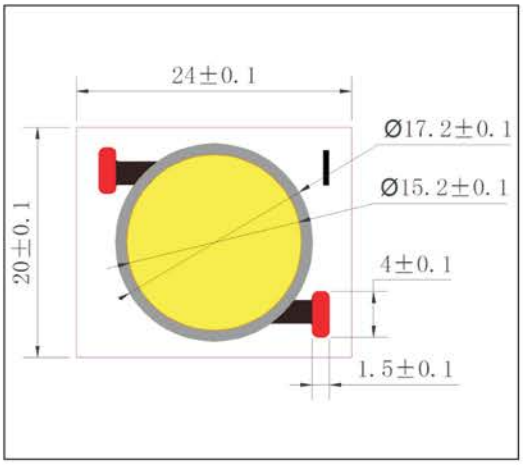

Absolute maximum parameters:

Parameter	Symbol	Rating
Forward Current	I_F	850mA
Reverse Voltage	V_{RMAX}	60V
Working Temperature	T_{OPR}	-30~+100℃
Storage Temperature	T_{STG}	-40~+100℃

Parameter/Ta=25℃:

Part Number	Rating	Color	Color Temperature Tc (K)	CRI Ra Min.	I_F(mA) TEST	Φ_V (lm) Typ.	V_F (V) Typ.
VO- Ceramic PCB 2024	25W	Natural White	6000	70	750	2950	37.8
		Neutral White	4000	75	750	2770	37.8
		Warm White	3000	80	750	2500	37.8