LED Vapor Fixture

Vapor Fixture

Product Description

VaOpto's LED Vapor Tight Fixture without ballast is wire and lampholder ready for two LED T8 tubes, which replaces tradional vapor tight fixture, and also an energy-efficient, lead-free, UV-free, and long-lasting cold lighting fixture.

Product Information

- Power input: 100-480VAC, 50/60Hz
- IP65
- 5-year limited warranty
- cULus: E335469
- Weight: 2.7 kg (6 lbs)
- Lens and Base Material: PC
- Hasp: PC
- Hook material: Stainless Steel

Ordering Information

Part# VO-TF-07W4-2

L: 1270 mm (50 in)
LF: 855 mm (34 in)
W: 123 mm (5 in)
H: 91 mm (3.5 in)

Installation

1. Disconnect the power before installation.
2. Drill the fitting holes at the place of installation (wall/ceiling), make sure, that no cables or other lines are passing in place of drilling.
3. Put the screws in the holes and fix the lamp to the mounting place.
4. Insert the installation cable, which is suitable for the installation, through the washer in the hole (4). (By slightly pulling, the position of the washer can be optimized.
5. Connect the cable end with the saddle (5) at the connecting plate. Pay attention to the correct polarity.
6. Adjust the connecting plate (7)
7. Insert the luminaire into the holder (8) and turn it at 90° until it registers.
8. Assemble the clamps (11) at the designated position
9. Put on the cover (10) and fix it with the clamps (11). All clamps should be used.

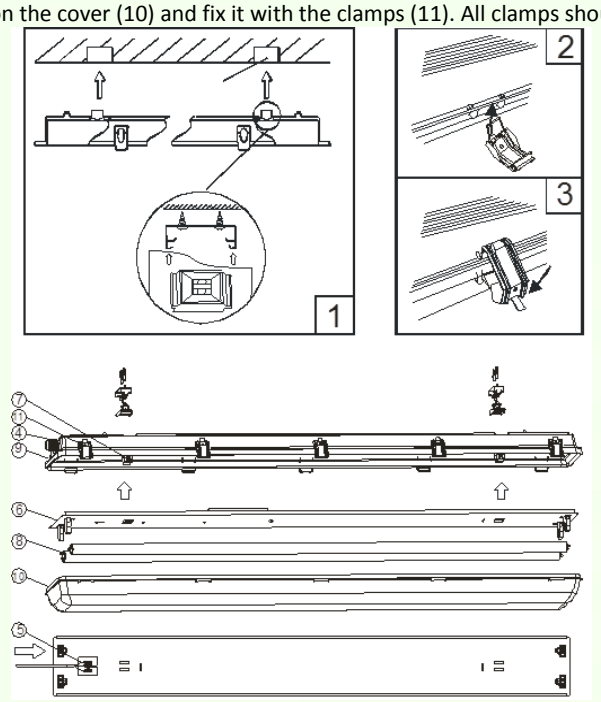

Safety Instruction

1. For LED Tube Use Only
2. Electrical works have to be done by certified electrician.
3. In case of damages, disconnect the lamp from the power. Do not try to repair the lamp on your own. Repair has to be done by certified electrician.

VaOpto
LED Manufacturer

VAOPTO
5178 W. Patrick Lane
Las Vegas, NV 89118, U.S.A.
P: 702-517-5789 F: 702-979-3582
info@vaopto.com
www.vaopto.com